VTX881

2U VPX Chassis, Three 6U Slots with RTM Support

VTX881

Key Features

- 2U Open VPX rackmount system platform
- Horizontal slots
- Dedicated Switch/management slot
- Up to two 6U VPX payload slots
- Compatible with 0.8-inch, 0.85-inch and 1.0-inch modules
- Support for Rear Transition Modules (RTMs)
- Redundant cooling in push/pull side to side airflow configuration
- Optional JTAG Switch Module (JSM)

Benefits

- 800W AC or 650W DC Power Input
- Electrical, mechanical, software, and system-level expertise in house
- Full system supply from industry leader
- AS9100 and ISO9001 certified company

OpenVPX™

vadatech
THE POWER OF VISION

VTX881

The VTX881 is a 2U VPX chassis with three 6U VPX slots. The chassis can accept 0.8-inch, 0.85-inch and 1.0-inch pitch modules. The chassis is ideal for commercial deployment.

Power Supplies

The VTX881 has a single AC input power supplies to provide 800W or -48V DC 650W. The chassis supplies 200W/slot and the AC input is universal.

Cooling and Temperature Sensors

The VTX881 provides cooling to the VPX slots designed to meet ANSI/VITA 65 providing 18 CFM per slot at 0.24 in-H2O @ 5000 feet. The VTX881 provides push/pull cooling to the RTM slots.

Backplane

The backplane provides two 5 HP VPX payload slots in a star configuration, fully compliant to VITA 46.0 baseline specification with additional support to the RTMs, compliant to VITA 46.10 and OpenVPX VITA65.

JSM

There is an optional JTAG Switch Module to provide JTAG access to the rear.

Figure 2: Front View

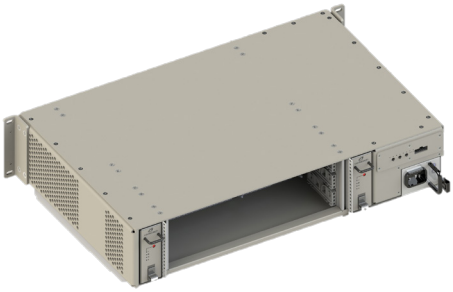

Figure 1: Rear View

Backplane Connections

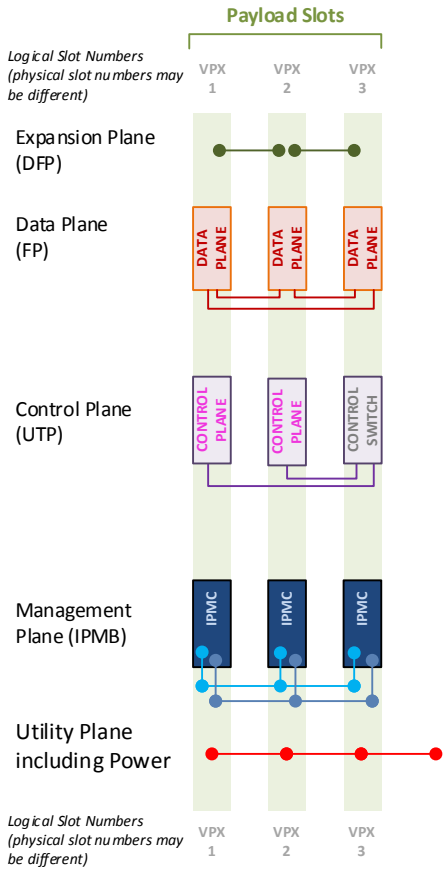

Figure 3: VTX881 Backplane Connections

The initial offering on VTX881 is based on backplane profile BKP6-CEN03_15.2.2-n. VadaTech can also design additional VITA standard backplane profiles for customer specific applications. Please contact your local sales team for more information.

Chassis Layout

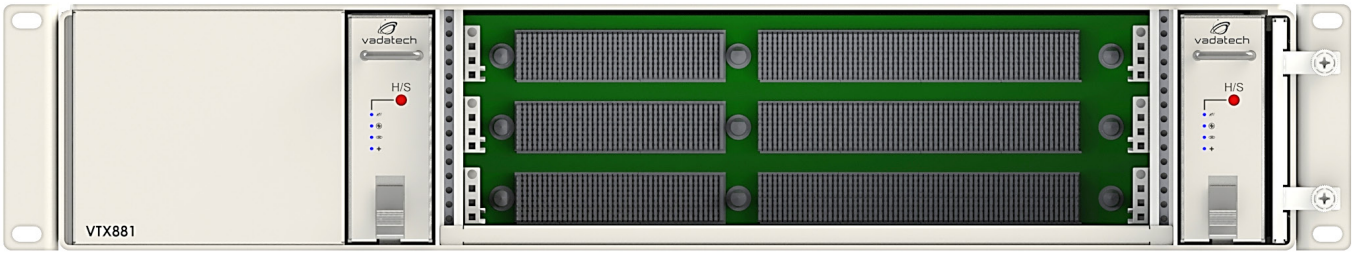

Figure 4: VTX881 Chassis Layout - Front View

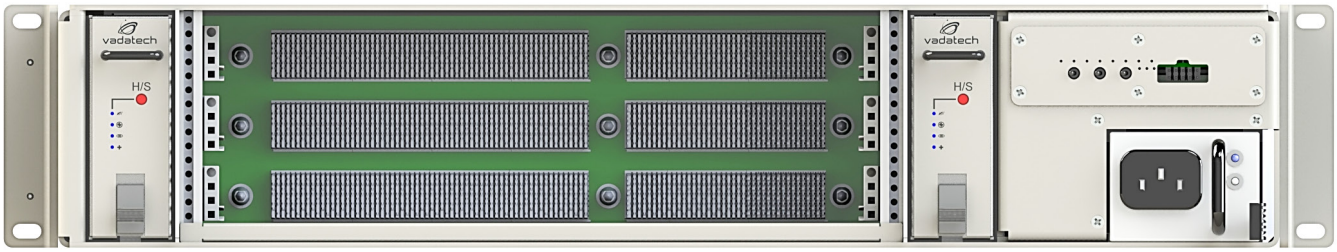

Figure 5: VTX881 Chassis Layout - Rear View

Specifications

Architecture		
Physical	**Dimensions**	Height: 2U
		Width: 19”
		Depth: 12.5”
		Weight: TBD lbs.
Type	**VPX Shelf**	Two Payload Slots up to 1.0” pitch and a dedicated Switch/management slot
Standards		
VPX	**Type**	VITA-46.0 Baseline Specification
Configuration		
Power		800W AC Input, 200W/slot or -48V DC 650W
Environmental		See Ordering Options
Cooling		Right to Left
Other		
MTBF	MIL Hand book 217-F@ TBD hrs	
Certifications	Designed to meet FCC, CE and UL certifications, where applicable	
Standards	VadaTech is certified to both the ISO9001:2000 and AS9100B:2004 standards	
Warranty	Two (2) years	

INTEGRATION SERVICES AND APPLICATION-READY PLATFORMS

VadaTech has a full ecosystem of VPX products including chassis platforms, shelf managers, VPX modules, Switch and Payload Boards, RTMs, Power Modules, and more. The company also offers integration services as well as pre-configured Application-Ready Platforms. Please contact VadaTech Sales for more information.

Ordering Options

VTX881 – A00-D00-0HJ

A = Power Supply	D = JSM	
0 = AC 800W 1 = -48V DC 650W	0 = Not included 1 = Included	
		H = Environmental
		See Environmental Specification* table option H description
		J = Conformal Coating
		0 = No coating 1 = Humiseal 1A33 polyurethane 2 = Humiseal 1B31 acrylic

Environmental Specification*

Option H	H = 0	
Operating Temperature	-5°C to +55°C	
Storage Temperature	-40°C to +85°C	
Operating Vibration	0.04 g2/Hz max	
Storage Vibration	20g	
Humidity	95% non-condensing	

* Please contact VadaTech Sales for other specification

Related Products

VPX518

- AMC FPGA carrier for FMC per VITA-57
- Xilinx Zynq-7000 FPGA in FFG-900 package(XC7Z100 or XC7Z045) with embedded ARM®
- Supported by DAQ Series™ data

VPX592

- 3U FPGA carrier for FPGA Mezzanine Card (FMC) per VITA-46 and VITA-57
- Xilinx Kintex UltraScale™ XCKU115 FPGA
- High-performance clock jitter cleaner

VPX599

- 3U FPGA Dual DAC and dual ADC per VITA-46
- Xilinx Kintex UltraScale™ XCKU115 FPGA
- Dual ADC @ 6.4GSPS 12-bits

Contact

VadaTech Corporate Office

198 N. Gibson Road, Henderson, NV 89014

Phone: +1 702 896-3337 | Fax: +1 702 896-0332

Asia Pacific Sales Office

7 Floor, No. 2, Wenhu Street, Neihu District, Taipei 114, Taiwan

Phone: +886-2-2627-7655 | Fax: +886-2-2627-7792

info@vadatech.com | www.vadatech.com

Europe: EMCOMO Solutions AG

Industriestr. 10, 89231 Neu-Ulm, Germany

Phone: +49 731 8803510 | Fax: +49 731 88035129

vadatech@emcomo.de | www.emcomo.de

Choose VadaTech

We are technology leaders

- First-to-market silicon
- Constant innovation
- Open systems expertise

We commit to our customers

- Partnerships power innovation
- Collaborative approach
- Mutual success

We deliver complexity

- Complete signal chain
- System management
- Configurable solutions

We manufacture in-house

- Agile production
- Accelerated deployment
- AS9100 accredited

vadatech

THE POWER OF VISION

Trademarks and Disclaimer

The VadaTech logo is a registered trademark of VadaTech, Inc. Other registered trademarks are the property of their respective owners. AdvancedTCA™ and the AdvancedMC™ logo are trademarks of the PCI Industrial Computers Manufacturers Group. All rights reserved. Specification subject to change without notice.

© 2018 VadaTech Incorporated. All rights reserved.

DOC NO. 4FM737-12 REV 01 | VERSION 1.1 – AUG/18